REVISIONS							
ZONE	LTR	DESCRIPTION	CHANGE No	DATE	BY	APPR'D
	REL	RELEASED FOR PRODUCTION	DR02171	07JUN05	DPZ	
2A	AA	1 TU169 WAS FM0001453	74377	18OCT12	WDE	MMc
1A		2 UPDATED TITLE BLOCK				
12G		3 UPDATED VIEWS TO REMOVE UNNECESSARY DIMENSIONS				
3D		4 UPDATED NOTES				

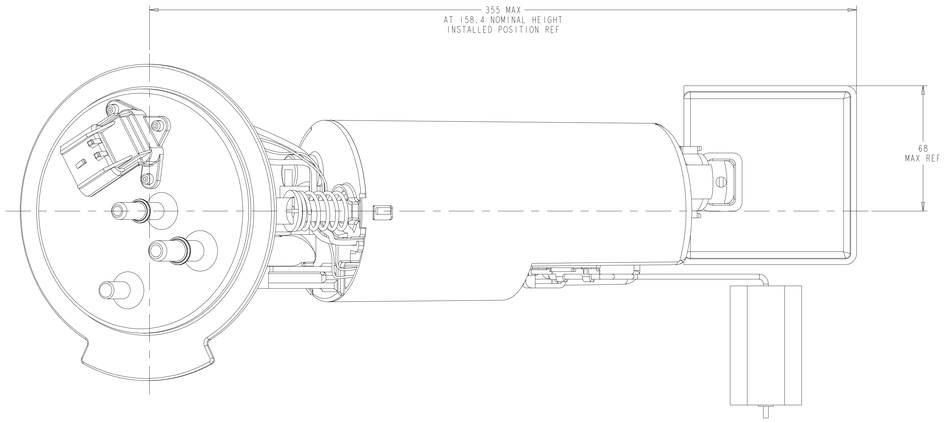

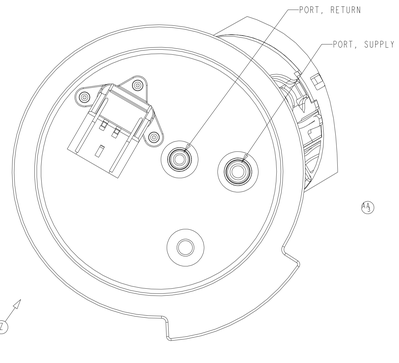

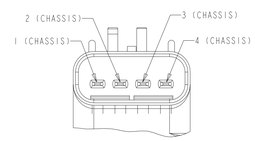

VIEW IN DIRECTION
OF ARROW Z

INTANK CONNECTOR WIRING			
LOCATION	FUNCTION	COLOR	WIRE GAUGE MINIMUM
1	PUMP GROUND	BLACK	14
2	SENSOR GROUND		20
3	SENSOR SIGNAL		20
4	PUMP B+	RED	14

LEVEL UNIT				
RESISTANCE VS. FLOAT HEIGHT				
POINT	HEIGHT (MM) BASIC	GAUGE RESISTANCE OHMS		
		NOMINAL	UPPER LIMIT	LOWER LIMIT
FS	132.90	70	90	50
FD	123.26	130	145	115
3/4	98.05	340	370	310
1/2	67.06	550	580	520
1/4	37.25	760	790	730
LOW FUEL WARNING	25.24	865	895	835
ED	13.63	970	1000	940
ES	3.07	1050	1080	1020

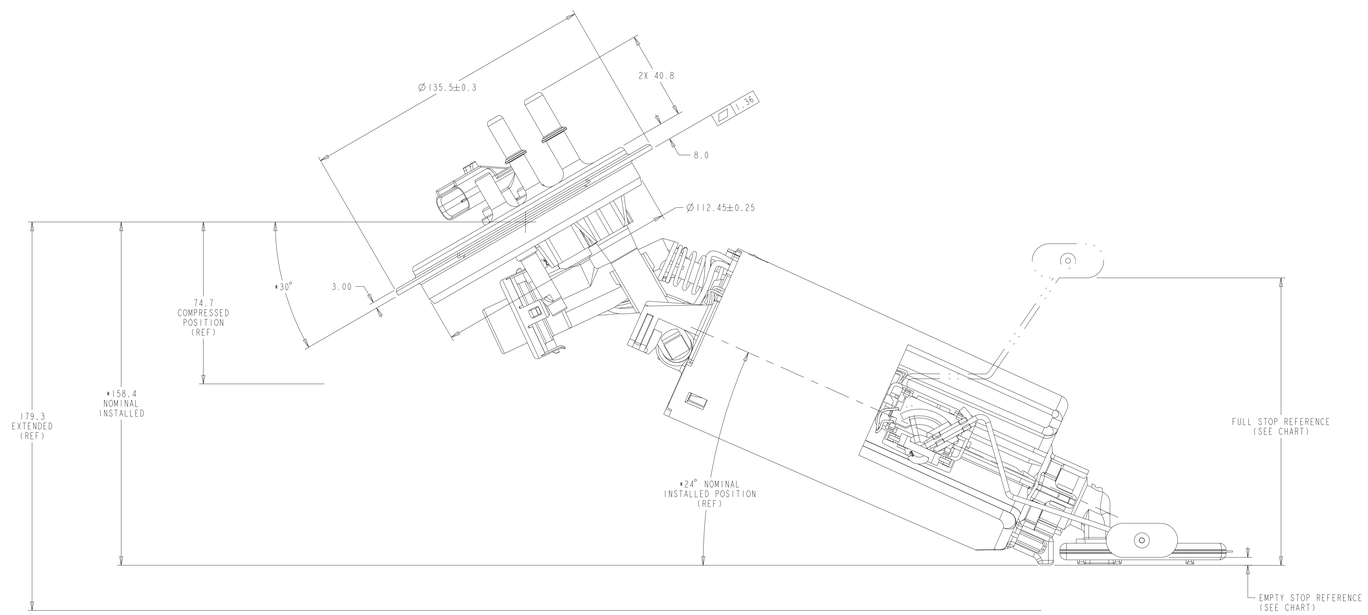

CHASSIS CONNECTOR WIRING	
LOCATION	FUNCTION
1	PUMP GROUND
2	SENSOR GROUND
3	SENDOR SIGNAL
4	PUMP B+

NOTES:

1. SPECIAL CUSTOMER PACKAGING REQUIREMENTS MAY CALL FOR THE ADDITION OF SPECIFIC LABELS NOT SHOWN ON THIS DRAWING.
2. MODULE TO BE PACKAGED USING COMPONENTS NOTED ON BOM SO THAT CONTAMINATION FROM FOREIGN MATERIAL IS PREVENTED:
   - PLUG PROTECTORS ON PORTS
   - POLYBAG
3. SHOWN WIRE ROUTING MAY DIFFER FROM FINISHED PRODUCT.
4. FUEL MODULE IS SHOWN IN INSTALLED POSITION. TRAVEL FROM THIS POSITION IS -83.7 TO +20.9.
5. THIS UNIT REPLACES CHRYSLER SERVICE P/N 05101830AB.
6. 6.0 AMP MAX DRY DEAD-HEAD CURRENT DRAW SUPERSEDES PF-8477 SECTION 2.4.11.

* AS MEASURED FROM BASE OF MODULE

▽ - DENOTES SAFETY CHARACTERISTIC
◇ - DENOTES SIGNIFICANT CHARACTERISTIC
◇ - DENOTES HIGH IMPACT CHARACTERISTIC

TI AUTOMOTIVE CONFIDENTIAL AND PROPRIETARY
THIS DRAWING IS THE PROPERTY OF TI AUTOMOTIVE AND INCLUDES CLAIMS PROPRIETARY RIGHTS IN THE SUBJECT MATTER SHOWN AND DESCRIBED ON THIS DRAWING AND RETAINS ALL INTELLECTUAL PROPERTY RIGHTS. THIS DRAWING IS PROVIDED TO RECIPIENT IN CONFIDENCE AND IN THE EXPRESS CONDITION THAT IT WILL BE HELD IN CONFIDENCE. THIS DRAWING SHALL NOT BE DISCLOSED TO OTHERS OR USED FOR THE PURPOSE OF MANUFACTURE OR OTHERWISE EXCEPT WITH THE PRIOR WRITTEN CONSENT OF TI AUTOMOTIVE. THIS DRAWING OR ANY PART THEREOF SHALL NOT BE REPRODUCED WITHOUT TI AUTOMOTIVE'S EXPRESS WRITTEN CONSENT. NO LICENSE OR OTHER RIGHT IS GIVEN OR IMPLIED BY THE PROVISION OF THIS DRAWING TO RECIPIENT. COPYRIGHT, TI AUTOMOTIVE, 2010. ALL RIGHTS RESERVED.

METRIC
ALL DIMENSIONS ARE IN MILLIMETERS

DO NOT SCALE
DECIMAL TOLERANCES UNLESS OTHERWISE SPECIFIED
ONE PLACE ±0.25 TWO PLACE ±0.13 ANGLES ±1°

THIRD ANGLE PROJECTION

DIMENSIONS IN ACCORDANCE WITH ASME Y14.5 - 2009

TI Automotive
630 COLUMBIA ST.
CARO, MI 48723
+1 989.673.7727

			MATERIAL/SPECIFICATION:
ENGINEER	M.McKERVEY	18OCT2012	
DES.MANAGER	S.KADY	18OCT2012	
DESIGNER	W.ERBACHER	18OCT2012	

CAD SYSTEM: PROVE	SCALE: 1:1	SHEET NO. 1 OF 1
REFERENCE (SIZE/REV.): FM0001453		PLM REFERENCE/REV.: 000108828/AA
REFERENCE (SIZE/REV.): CAD ASM: AR0032410/AA		PLM REFERENCE/REV.: CAD DRW: AR0032412/AA
DRAWING NAME: FUEL MODULE ASSEMBLY - RS FFV AFTERMARKET		
SIZE: A0	DRAWING NUMBER: TU169	